Quick Installation Manual

HEIWIT-NA-48V210Ah

Batteria agli ioni di sodio

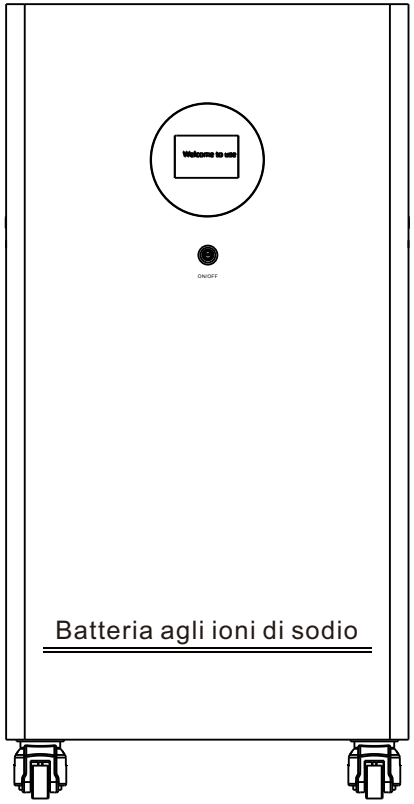

Appearance is introduced

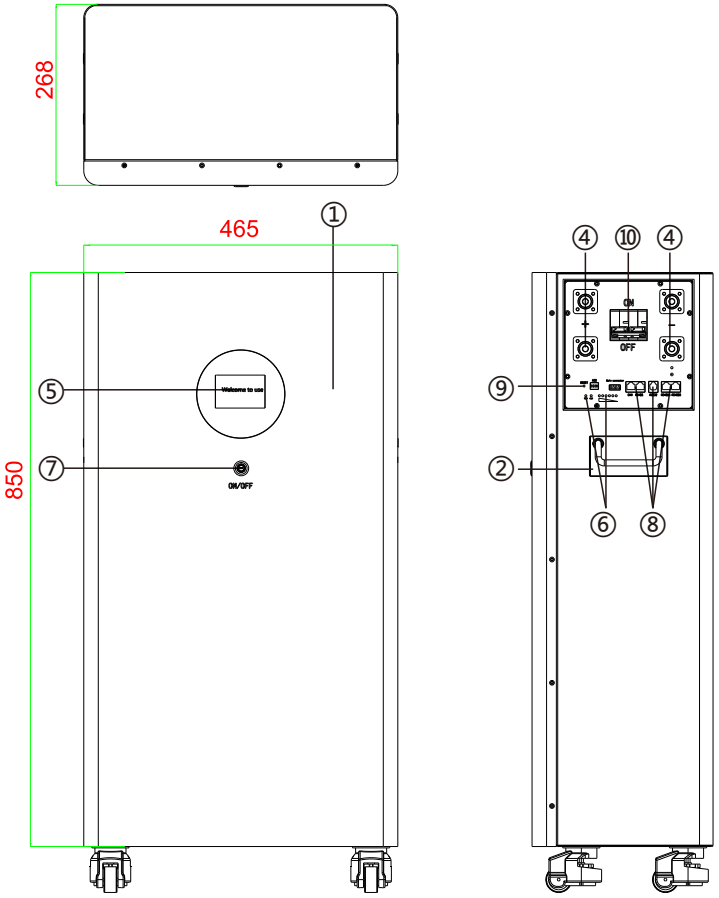

① Cover
② Handle
③ Travelling wheel
④ Output Terminal
⑤ Display Screen
⑥ LED indicator
⑦ Power Switch
⑧ Communication Interface
⑨ Reset Switch
⑩ Air Switch

A. Comparison table of DIP switch settings

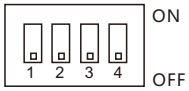

ADS	DIP Switch			
	#1	#2	#3	#4
0	OFF	OFF	OFF	OFF
1	ON	OFF	OFF	OFF
2	OFF	ON	OFF	OFF
3	ON	ON	OFF	OFF
4	OFF	OFF	ON	OFF
5	ON	OFF	ON	OFF
6	OFF	ON	ON	OFF
7	ON	ON	ON	OFF
8	OFF	OFF	OFF	ON
9	ON	OFF	OFF	ON
10	OFF	ON	OFF	ON
11	ON	ON	OFF	ON
12	OFF	OFF	ON	ON
13	ON	OFF	ON	ON
14	OFF	ON	ON	ON
15	ON	ON	ON	ON

B、Communication cascade between BMS modules

Lead out a communication network cable from the RS485 port of the BMS module, and connect it to the RS-485 of the FSU device serial port of the dynamic loop monitoring system. The RJ45 plug of the network cable 1 positive (white orange) connects to RS-485A; 2 negative (Orange)Connect to RS-485 B;

The wiring is as shown in the figure below:

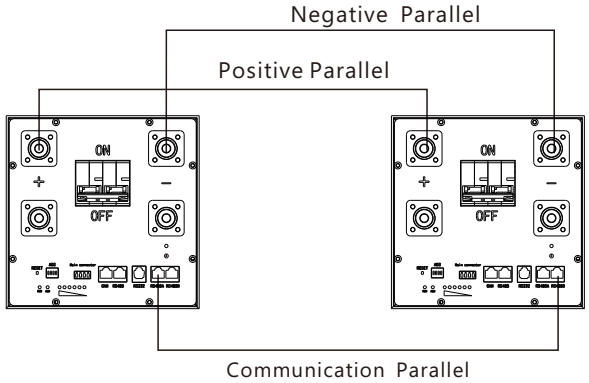

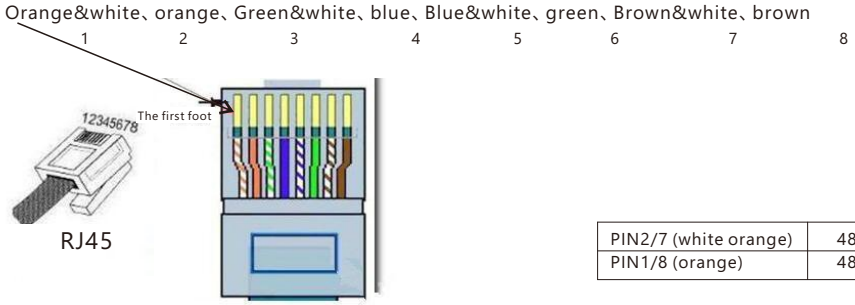

PIN2/7 (white orange)	485-A
PIN1/8 (orange)	485-B

Common abnormal phenomena of battery system and troubleshooting methods

Failure phenomenon	Possible Causes	
BMS cannot be activated	Whether the weak current switch of the BMS is turned on; Module serial connection connection error	Check the connection line and install it according to the method described in the installation manual
BMS red light is always on	Red light warning, existence failure	Locate the fault point according to the method described in the above table: 1. Voltage sensor failure/temperature sensor failure: Check whether the sampling line is connected correctly, you can replace the sampling line for troubleshooting; restart to observe whether it is restored 2. Charging circuit failure, discharging circuit failure: contact the manufacturer for consultation 3. Battery failure: check whether the connection of the sampling terminal is normal: check whether the voltage value of all modules is within the voltage range in the manual after turning off the BMS: observe whether it is cleared after restarting, otherwise contact the manufacturer 4. Sampling IC signal failure: check whether the voltage sampling line is connected properly, you can replace the sampling line for troubleshooting: observe whether it is restored after restarting: contact the manufacturer if it is not restored
BMS cannot communicate with dynamic ring	1. The BMS aid code address is different from the address of the dynamic loop query 2. When multiple units are connected in parallel, they cannot communicate normally 3.The communication serial port setting is incorrect 4.RS485 communication line sequence is incorrect 5.Abnormal physical connection	1. Detect and reset the RMS dialing address 2. When multiple units are connected in parallel, different addresses need to be set, and the dialing address of each product should be reset according to the address of the dynamic loop 3. Set the correct serial port configuration according to our communication protocol 4. Connect the communication line correctly as described in the installation manual 5. Check that the physical connection of the communication circuit is normal

Safety and precautions

1. The battery module must be used in conjunction with BMS, and the mixed use of batteries from different manufacturers is strictly prohibited.

2. Check the battery module voltage for damage; if there is any abnormality, please stop using it.

3. It is strictly forbidden to stack the whole trailer battery with fork plate during transportation and storage, and it is forbidden to stack battery modules when installing and transporting batteries. There are positive and negative lead terminals or sampling line lead ends, and it is strictly forbidden to squeeze, stack and place them down.

4. Parallel matching requirements for battery modules: (Notes before picking and installation)

(1) Two identical models and same capacity, The battery modules of the same voltage are connected in parallel to 48V.

(2) Serial use is strictly prohibited.

5.Parallel wires are included in the battery module packing box, and the parallel wires correspond to the battery modules. Mixed insertion is strictly prohibited.

6.It is forbidden to use or leave the battery module near high temperature and high heat sources, away from fire and water sources.

7.It is forbidden to disassemble the battery module, knock, throw or step on the battery module, and dismantle the BMS and dismantle the yellow tamper-evident sticker without authorization.

8. Before installing the battery module, check whether the open circuit voltage of the battery is within the normal range. The "positive" and "negative" signs are printed on the module, and the electrical properties should be correctly determined. It is strictly forbidden to reverse or short-circuit the battery.

9.Insulation tools and gloves should be used during installation and transportation, and metal-containing conductors such as watches, bracelets (bracelets) and rings should be removed from the wrist to prevent electric shock and short-circuit the positive and negative electrodes. During installation, the battery module poles need to be insulated and protected. If the poles are close to the battery rack and other conductors, the battery poles or battery racks need to be insulated and protected.

10. The recommended transportation method is for two people to carry it at the same time. The transportation tool is a safety rope or a load-bearing net bag. The battery box must be carried to the site. Violent construction is strictly prohibited to damage the product.

11. Installation and maintenance requirements. After the battery module is installed on the wall, the poles and plug-ins are required to achieve frontal maintenance.

12. Battery rack compatibility: multiple groups of parallel type batteries, battery rack installation steps, battery module installation and cable connection, according to the different types of batteries to choose the corresponding installation diagram, installation without battery rack (such as outdoor integration Power cabinet) Refer to the schematic diagram of battery module installation and cable connection in battery rack mode.

13. Please read this installation manual carefully before installation. If you have any questions, please contact your supplizer.

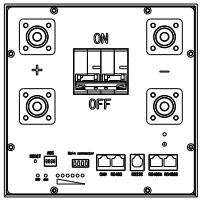

BMS Test

After the BMS and battery modules are installed in the above order, you need to activate the BMS, press the ON/OFF button to power the BMS. After the BMS is activated, the normal operation status is only the green light (the red and orange LED lights are both off). When a red light appears as an alarm indicator, press the reset button to restart to eliminate the alarm (when you see the marquee flashing cycle of the capacity indicator, and the 9 indicator lights flash 3 times during self-test, the force restart is successful). Long press RESET or ON/OFF reset button for 3S, all LED lights of BMS will go out.

When the BMS is running normally, measure the battery voltage, change the floating voltage of the switching power supply to be consistent with the battery voltage, check the positive and negative cables of the switching power supply, and connect the positive and negative poles of the switching power supply to the battery positive busbar (or the positive pole of the 48V battery system) Pole), connect the negative pole of the switching power supply to the battery negative bus (or the P-output of the BMS): turn on the battery core/circuit breaker of the power supply, and modify the power supply parameters according to the following table.

Appendix: Switching power supply system Sodium Battery parameter setting

NO	Parameter type	48V battery system
1	float charge voltage	61.6V
2	Equalized charge voltage	62.4V
3	battery capacity	Set according to the actual capacity of the installed battery
4	Charging	Typical 0. 20C ; Maximum 1C(Can be setted)
5	Over voltage alarm	62.4V
6	Low voltage alarm	32V
7	EOD(end of discharge)	28.5V
8	Inverter Cutoff Voltage	32V

The Battery System And The Dynamic Environment Monitoring FSU Connection

1.After the battery system is installed, you need to connect the RS485/RJ45 network cable port of the BMS module with a communication network cable. Multiple BMS modules can be connected in cascade with a communication network cable (no connection is required when a single module is used).

2.MultipleWhen BMS modules are used in parallel, it is necessary to set the communication address (that is, the dial switch ADD). When a single BMS module is used, the communication address is 1, and the dial is "1". The original state is "0", which means "OFF", dial up to "1", which means "0N".

Note: Both RS485 network cable ports of BMS can communicate. Multi-level cascade starts from address #1 (communication starts from #2) and dials according to the dial switch comparison table as shown below. Through the host computer software, set the master-slave BMS, usually the first one is the master BMS, and the others are set as the slave BMS, up to 12 units in parallel.

Troubleshooting of the installation and maintenance of Sodium Battery module

LED indicator definition of BMS module

Logo	Show Content	Colour	Description
Error	Fault Indicator	Red	Red light is always on 1. Short circuit, reverse connection, 2. Cell failure: cell voltage is less than 1.5V, or greater than 4.1V 3. BMS failure (voltage sensor, temperature sensor failure, abnormal charging and discharging current)
Run	Running Lights	Green	1. Idle: the green light is always on 2. Charging: the green light flashes slowly 3. Discharge: the green light flashes quickly 4. Fully charged: the green light is always on, 4 capacity lights are on
Alm	Warning Indicator	Yellow	1. Warning: Yellow light flashes -1Hz (cell voltage is too low, discharge current, temperature is too low, temperature is too high, capacity is low, Pack voltage is too high) 2. Protection: the orange light is always on (the battery voltage is too low, the battery cell voltage is too low, the charge and discharge are overcurrent, the temperature is too low, and the pack voltage is too high)
Soc	Battery Capacity Indicator	Green	The capacity LED indicator light flashes slowly at 0.5HZ only when charging, and other lights are always on: when the capacity is 100%, All 4 lights are on: when the capacity is 99%-75% (inclusive), the fourth light from the top flashes slowly The bottom three lights are always on: when the capacity is 74%-50% (inclusive), the third light from the top flashes slowly and the bottom two lights are always on: when the capacity is 49%-25% (inclusive), The second light from the top flashes slowly and the bottom light is always on: when the capacity is 24%-0% (inclusive), the first light from the top flashes slowly

How to judge LED and buzzer when BMS fails

Invalid ErrledStatus Judgment	Invalid Buzzer Judgment
Entry conditions: When in the protection state or failure state: 1. Press RESET 1S to release and hear a short beep Buzzer sound 2. The RUN light is always on, and the ERR light flashes times number, display the alarm code in turn; 3. After the display, the ERR light returns to always on status	Entry conditions: Buzzer control 15S as a period
Judgment: Red light flashes: Voltage sensor failure: 1 time Temperature sensor failure: 2 times Charging circuit failure: 3 times Discharge circuit failure: 4 times Battery failure: 5 times Sampling IC communication failure: 6 times	judgment: 1. Reverse connection, short circuit; 4 times; (highest priority) 2. Battery failure; 3 times; 3. Voltage sensor failure, temperature sensor failure; 2 times; 4. Failure of charging circuit and discharging circuit; 1 time; (lowest priority)